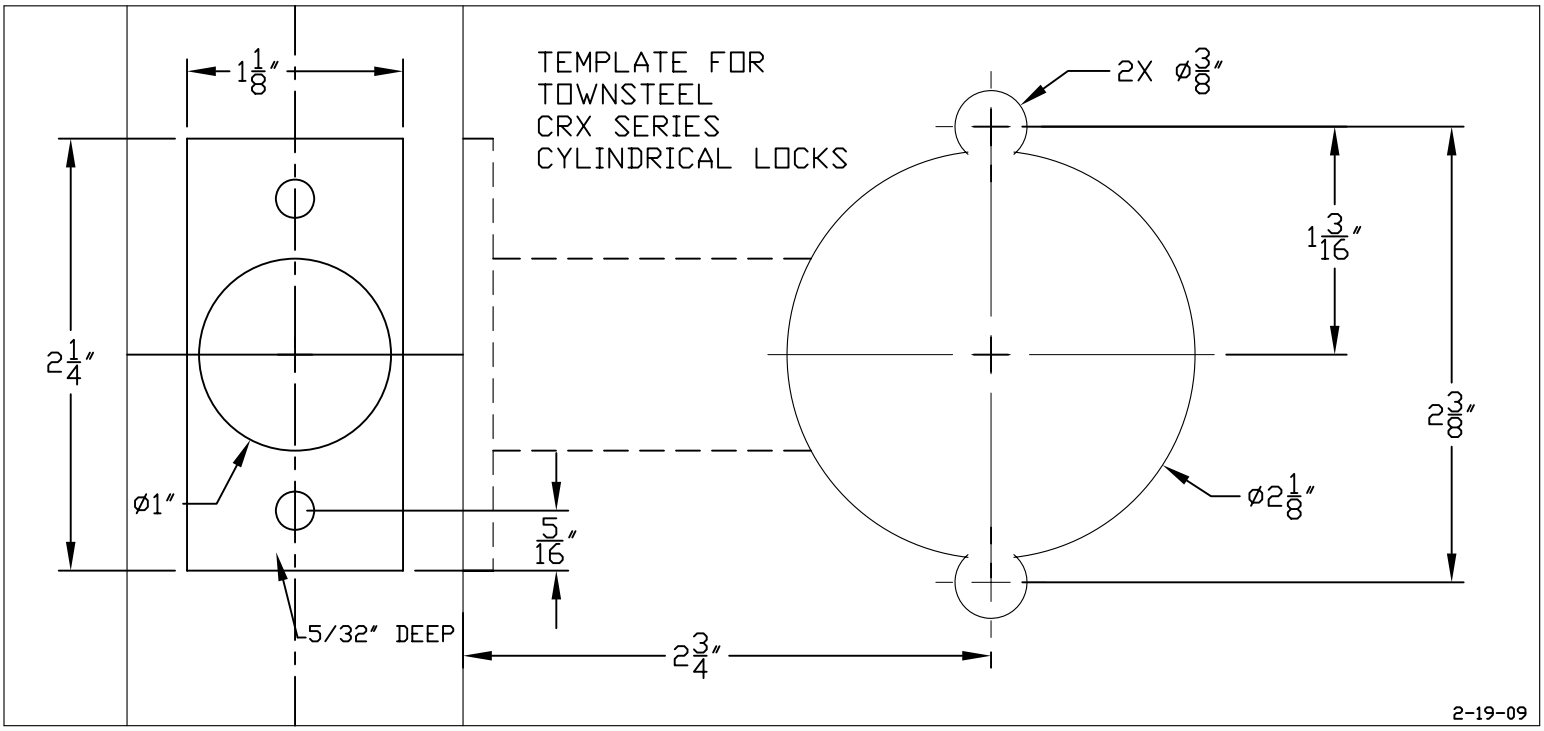
TEMPLATE FOR
TOWNSTEEL
CRX SERIES
CYLINDRICAL LOCKS
1 1/8"
2 1/4"
ø1"
5/32" DEEP
5/16"
2 3/4"
2X ø3/8"
1 3/16"
2 3/8"
ø2 1/8"
2-19-09