MS SERIES TEMPLATE FOR MSE-C & MSE-AD

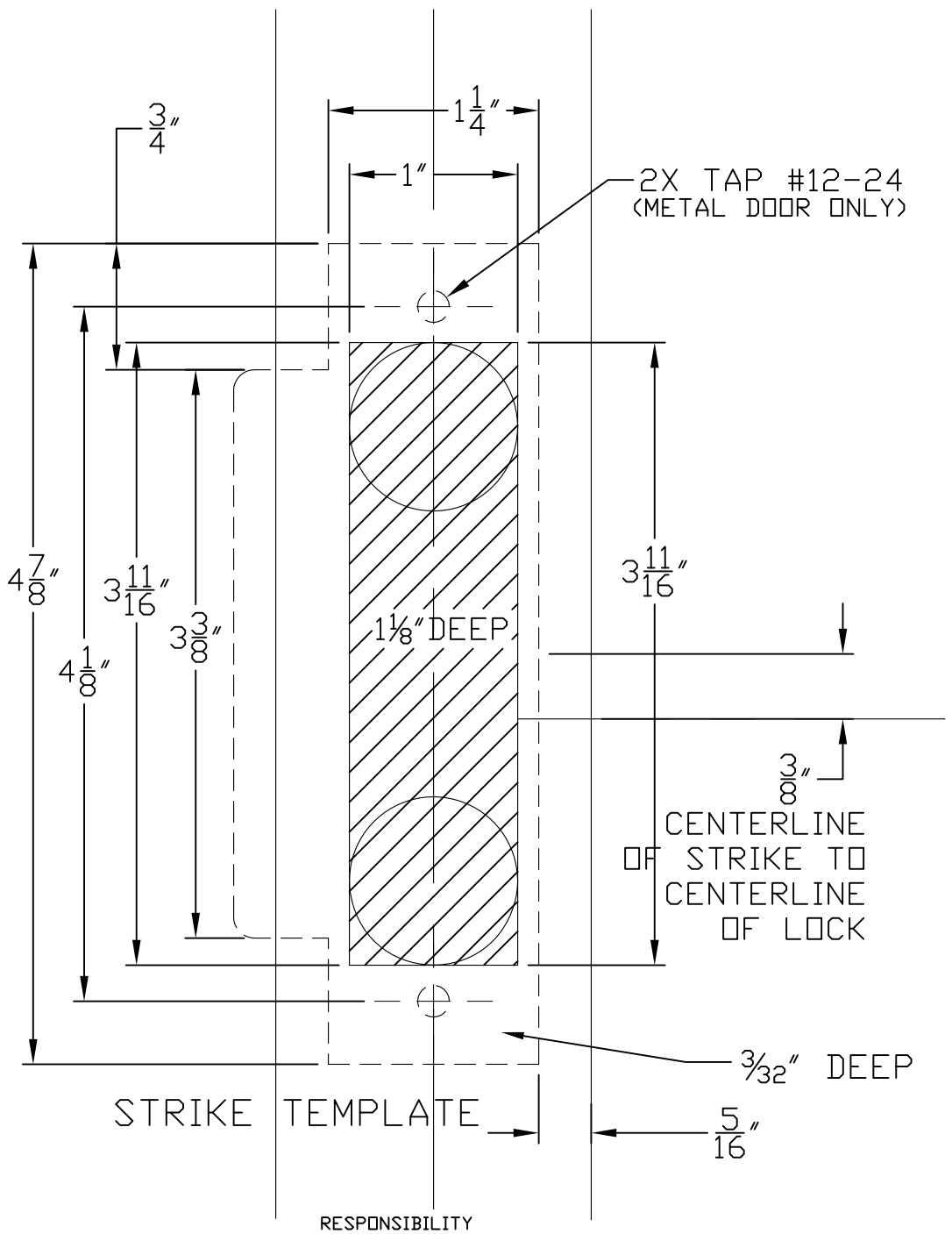

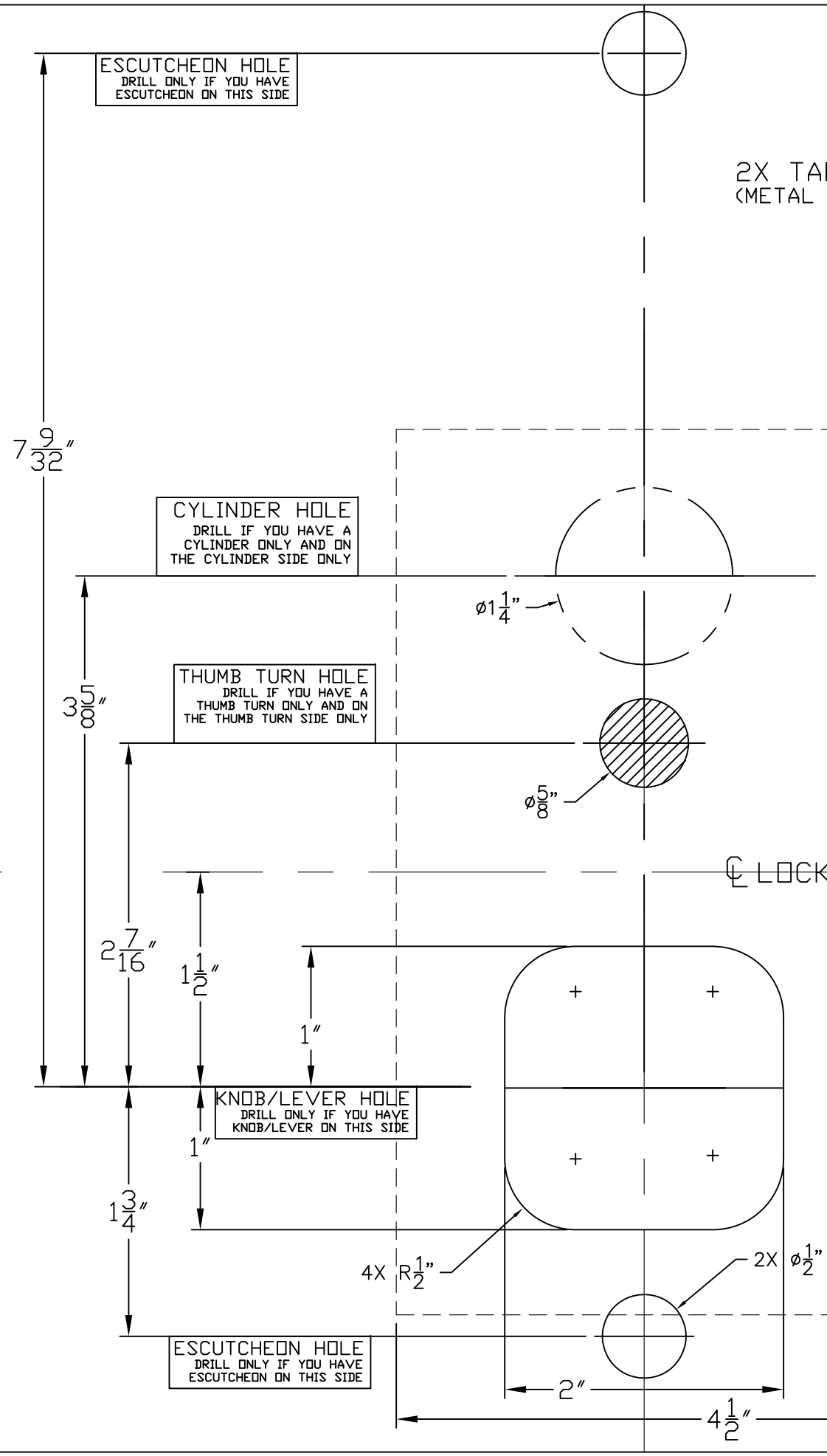

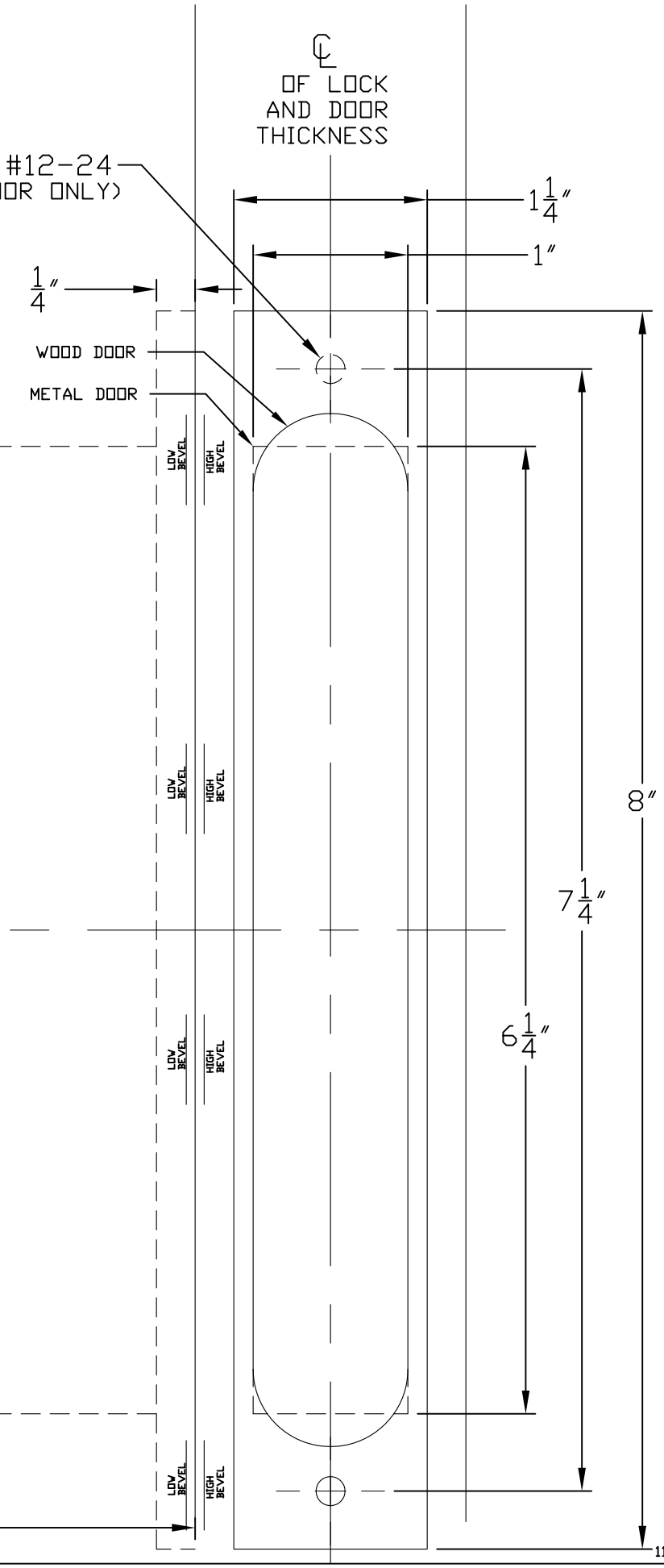

RESPONSIBILITY

Door and Frame Manufacturers are responsible for providing adequate construction or reinforcements for proper installation of hardware shown. All architectural builders hardware must be installed on properly reinforced doors and frames, regardless of the type, material, or method of construction.

TEMPLATE SCALE IS 1:1 IF THIS MEASURES 1"

11-2-13

MS SERIES TEMPLATE FOR MSE-C & MSE-AD

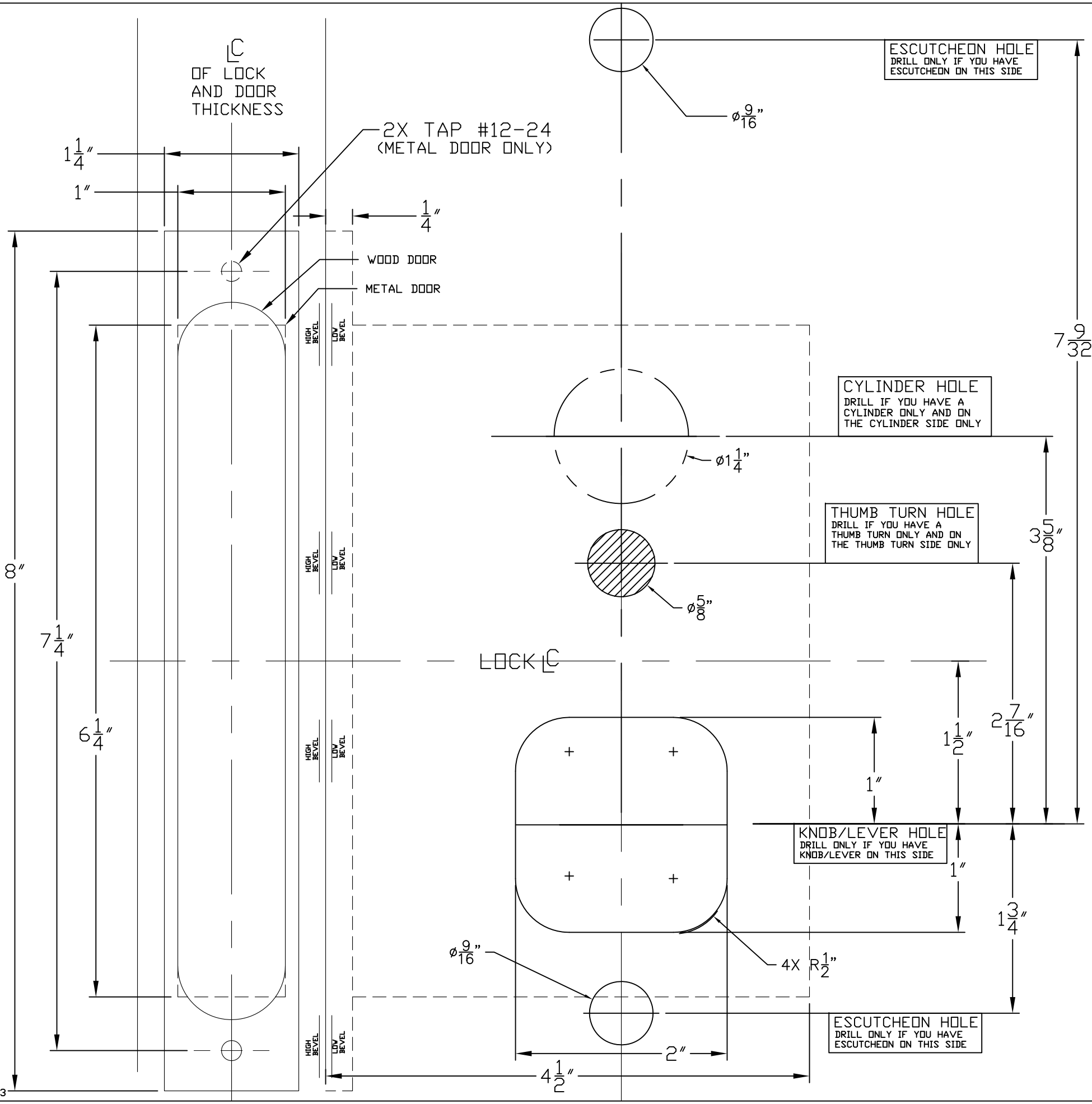

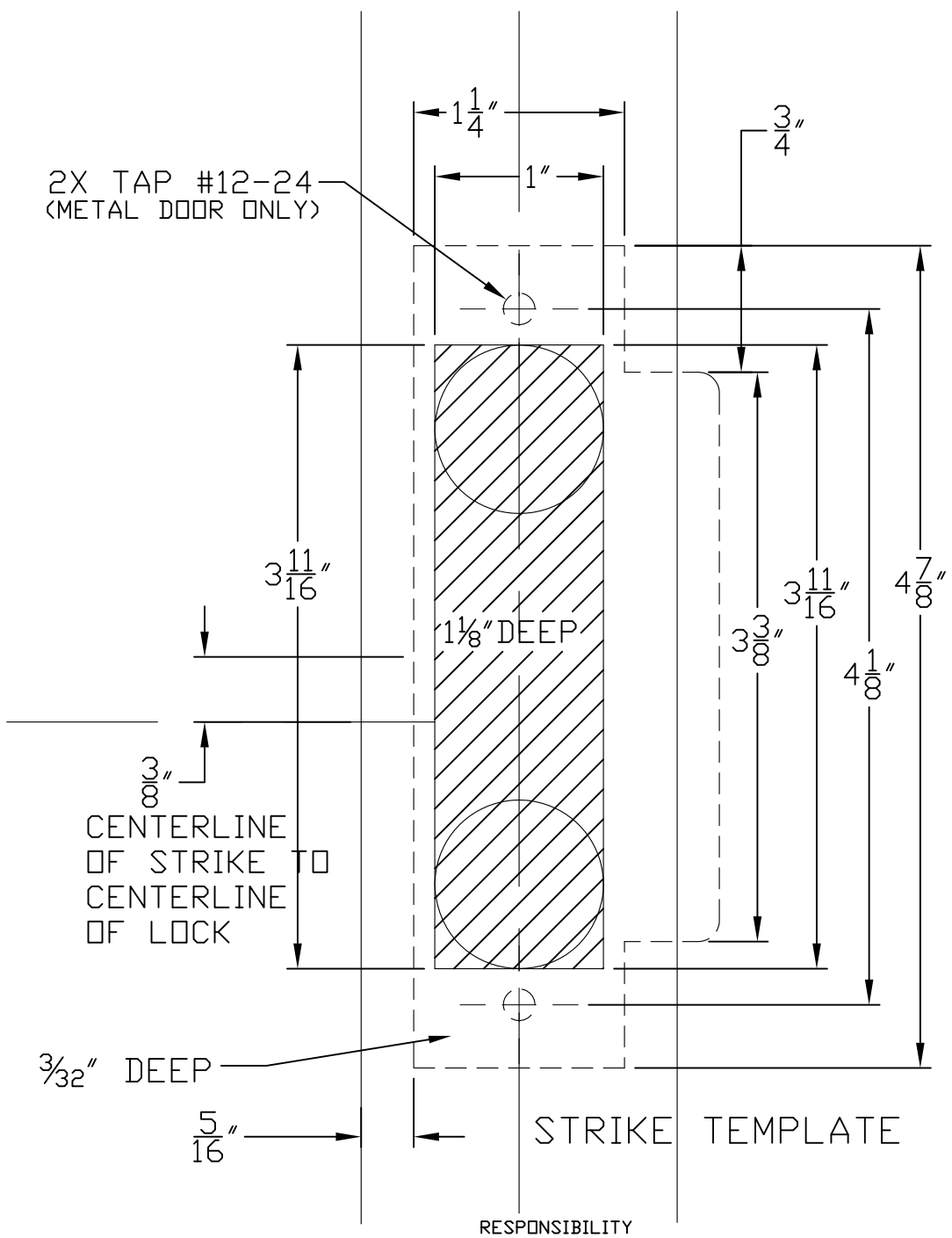

RESPONSIBILITY

Door and Frame Manufacturers are responsible for providing adequate construction or reinforcements for proper installation of hardware shown. All architectural builders hardware must be installed on properly reinforced doors and frames, regardless of the type, material, or method of construction.

TEMPLATE SCALE IS 1:1 IF THIS MEASURES 1":

11-2-13